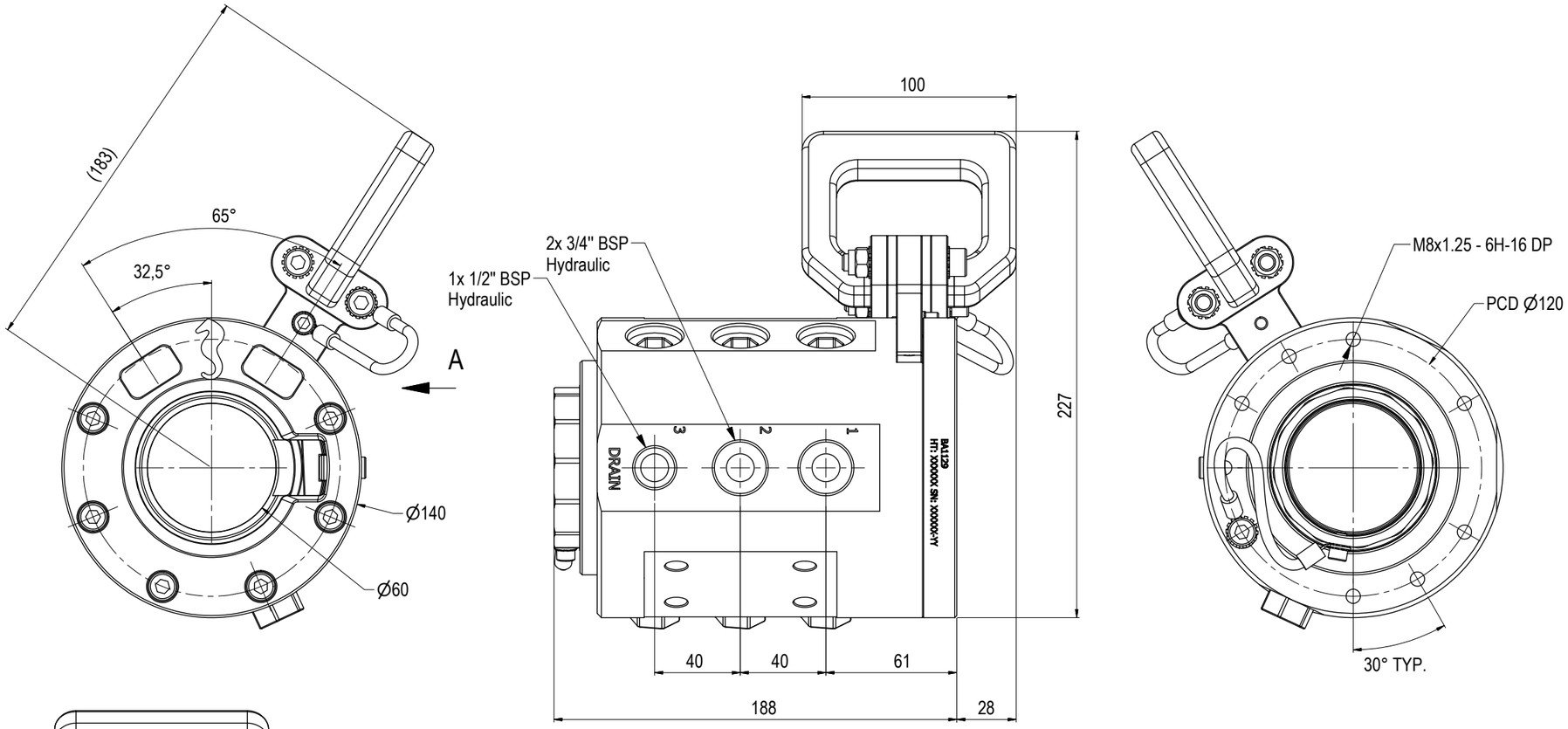

NOTE: 1
DESIGN CODE:
NS-EN 13445

NOTE: 2
TECHNICAL CLASSIFICATION:

Article Type:	003-Valve Stabs
Main Group:	3.04. Ø60-Valvestab
Intermediate Group:	3.34.02. Receptacle
Sub Group:	3.34.75.3. Triple

NOTE: 3
INTERFACE INFORMATION:

Pressure Rating Bar:	250
Material:	Intervention
Weight:	9 kg
Volume:	1,99 dm^3
Surface Area:	4276 cm^2
Hydraulic:	2x3/4" BSP - 1x1/2" BSP
Mechanical:	N/A
Electrical:	N/A
Com. & Protocol:	N/A

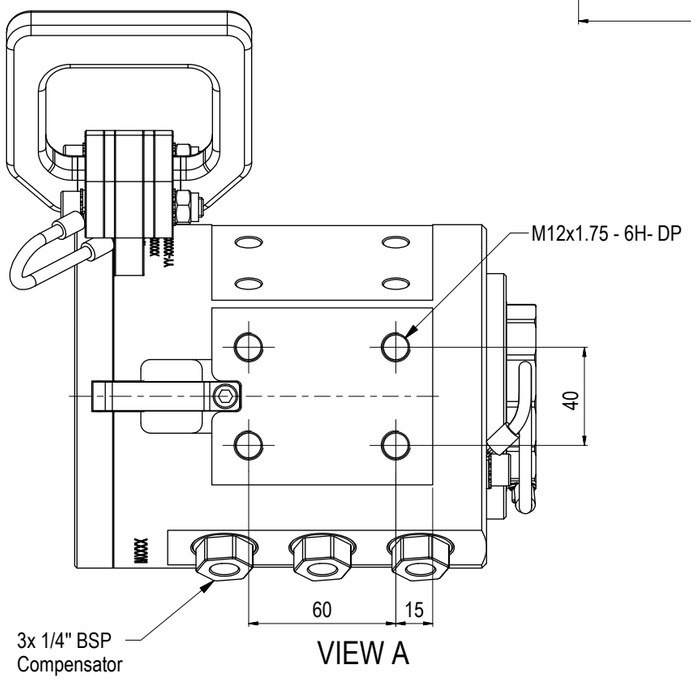

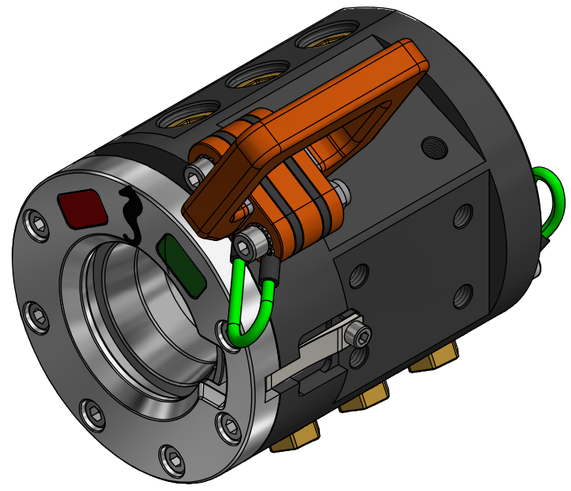

Rev.	Date	Reason for issue	Revision change	Made	Chk'd	Appr.
10	30.5.2024	9-IFU (Issued for Use)		WTJ	HNJ	WTJ
09	19.7.2021	9-IFU (Issued for Use)		WTJ	LGH	WTJ
08	30.1.2019	9-IFU (Issued for Use)		WTJ	LGH	WTJ
07	24.4.2018	9-IFU (Issued for Use)		WTJ	LGH	WTJ

BLUE LOGIC

Dwg Scale: NTS
Dwg Proj:
Dwg Format: A3

Drawing title: Ø60 TP VStab Rec 250Bar Interv Man BSP 3/4"-1/2" wPorts

Drawing number: BA5540

Rev. 10